Kingsland Multi 70 Iron Worker

Hydraulic Iron Worker

OPERATING MANUAL

Model: MULTI 70

Document: M261125 Rev 0, 25/11/2026

Published by Capital Machinery Sales Pty Ltd

Manufactured by The Kingsland Engineering Company Ltd, England

WARNING: Do not operate this equipment without reading and understanding this manual.

Contents

Quick Start **3**
1 Safety **4**
1.1 General safety 4
1.2 Machine specific hazards 4
1.3 Safety devices 5
2 Specifications **6**
Measurements 6
Capacities 6
Capacities by station 6
Additional tooling 7
Standard equipment supplied with the machine 8
3 Installation **9**
3.1 On delivery and lifting 9
3.2 Site 9
3.3 Electrical connection 9
3.4 Hydraulic pressure gauge 9
3.5 First checks 9
4 Operation **10**
4.1 Controls 10
4.2 Operating mode switch 10
4.3 Punching 11
4.4 Shearing 16
4.5 Angle cutting 16
4.6 Section cutting 17
4.7 Notching 18
4.8 Special tooling 18
4.9 Stroke adjustment 23
4.10 Switching off 23
5 Maintenance and Troubleshooting **24**
5.1 Maintenance schedule 24
5.2 Hydraulic system and lubrication 24
5.3 Cleaning 25
5.4 Blades and tooling 25
5.5 Punch ram and shear arm adjustment 29
5.6 Hydraulic and electrical circuits 31
5.7 Troubleshooting 32
5.8 Parts 33
6 Warranty and Support **34**
6.1 Warranty 34
6.2 Making a warranty claim 34
6.3 Service and parts 34
6.4 Revision history 34

© Capital Machinery Sales Pty Ltd 2026

Quick Start

This page covers everyday use. Read Section 1 Safety before using the machine for the first time.

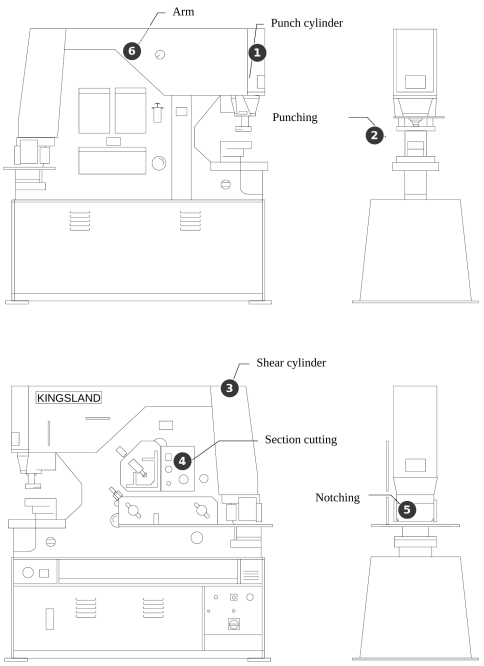

Figure 1: Machine stations and main parts: 1 Punch cylinder, 2 Punching station, 3 Shear cylinder, 4 Section cutting station, 5 Notching station, 6 Arm

Before you start (every day)

- Check the hydraulic fluid is at the top level of the inspection glass.
- Operate the oil pump 2 or 3 times. Check the pump oil level and that oil pressure is indicated.
- Check the condition of all blades, punches and dies.
- Check every station for obstructions. Remove off-cuts and slugs from the work area.
- Clean any mill scale from around the cutting apertures.

Basic job

1. Set the operating mode switch to **INCH**. Set up the tooling and check the punch and die are aligned.
2. Set the hold-down, support screw or stripper plate to suit the material thickness.
3. Set the operating mode switch to **NORMAL**.
4. Place the material. Feed it between the blades from the hold-down side.
5. Press the footswitch fully down. The tool moves at working speed. Raise your foot to the middle position to hold the tool. Remove your foot completely to return the tool to the top.
6. Remove the finished work and any off-cuts. Keep hands and fingers out of the red danger areas.

Stopping

Switch the machine off whenever you leave it. Never leave it running unattended.

WARNING: Never put fingers or limbs into or beyond the red painted danger areas or the warning labels. Stay within the rated capacity of the machine.

© Capital Machinery Sales Pty Ltd 2026

1 Safety

1.1 General safety

Read this manual before using the machine, and keep it with the machine.

- Only trained and authorised people may use, set up or maintain the machine. One operator only.
- Use the machine only for punching, flat bar shearing, notching, angle cutting and section cutting of mild steel within the limits in Section 2.
- Wear safety gloves and safety boots, plus any other PPE listed in Section 1.2. No loose clothing or jewellery, and tie back long hair.
- Keep the work area clean, dry, well lit and clear of offcuts.
- Never remove, bypass or modify any guard, safety device or safety sign.
- Never clean, oil or adjust the machine while it is running.
- Electrical work must only be done by a licensed electrician.
- In a fire, isolate the power and use a dry powder or CO2 extinguisher. Never use water on electrical equipment.
- Report any damage or fault, and do not use the machine until it is repaired.

1.2 Machine specific hazards

- Position the machine so the operator has enough room to work, allowing for the long lengths of material that may be punched or cut.
- Consider whether extra equipment is needed to handle long or heavy items safely. Support heavy work with a sound work steady.
- Everyone who uses the machine must be given adequate instruction on its operation and safety. Decide which people are responsible for changing and setting tools and blades, and give them more detailed instruction.
- The main ways the machine is used outside its design are: using materials other than mild steel (45 kg/mm²), using the material hold-downs incorrectly, and punching, cutting or notching small items. Small items encourage the operator to put fingers or hands into the danger area.
- Place and remove small items such as small pieces of plate or bar with suitable handling aids. Extra guarding may be required to keep the operator safe.
- Any part of the machine painted **red** is a danger area. Do not put fingers or limbs into or beyond the vicinity of the warning labels.
- Do not punch material thicker than the punch diameter. This overloads the punch and can break it.
- Stripping forces can be severe. Unbalanced stripping forces can break a punch.
- Do not exceed the capacity of the machine by using the relief valve as a safety valve.
- All adjustments, setting, tooling changes and maintenance must be done by a suitably qualified engineer, following the manufacturer's instructions. Pay particular attention to the correct setting and alignment of punches, dies, blades and other tools.
- Never lift the machine with slings under it. Lift only by the lifting eye.
- When punching with the bolster in the overhang position, the back securing bolt must be used.
- The operator must check that all tooling is in good condition before operating the machine.
- Never leave the machine running unattended. When leaving, the machine must be switched off.
- Remove off-cuts, slugs and any other waste from around the machine before leaving the work station.
- Bending tools must not be fitted until adequate safety measures are in place. Bending tools can normally be used without extra fixed guarding if all of the following apply: the clearance between

© Capital Machinery Sales Pty Ltd 2026

the top tool and the work piece is kept to a minimum and never exceeds 6 mm; the bending tool is set by a skilled and competent person; and a lockable cover is fitted to stop unauthorised changes to the limit switch, with the key kept by the person who sets the tool. Bending tools are supplied with a suitable cover and lock as standard.

- If you fit extra tooling or equipment at any time, review the guarding again and seek the manufacturer's advice if needed.
- Sound pressure level: 73 dB maximum, measured at 1 m (manufacturer test).

1.3 Safety devices

- **Guards and barriers.** The machine is supplied with guards and barriers as standard. They give a generally accepted level of guarding when the machine is used for the purpose it was designed for. Refit any guard or hold-down removed for maintenance or adjustment before the machine goes back into service.
- **Material hold-downs.** Adjust to the thickness of the material at the shear, angle and section stations. Never feed bar ends beyond the hold-down.
- **Punch stripper plate.** Set with enough clearance to place and remove the material. It must not restrict the punch stroke.
- **Stroke limit switches.** Set the punch and shear stroke limits (Section 4.9).
- **Relief valve.** If the hydraulic circuit is overloaded, the oil is sent straight back to the tank until the overload is removed. The maximum system pressure is set at the factory to 245 bar.
- **Electrical protection.** The circuit protects against sustained overload and phase failure. If the machine cuts out during a job, find the cause before using it again.
- **Isolator.** Isolate the machine through the isolating switch before any adjustment or maintenance (Section 3.3).
- **Operating mode switch.** INCH mode makes all stations move slowly for setting up (Section 4.2).
- **Three-position footswitch.** Lets the operator hold the tool at any point in the stroke (Section 4.2).
- **Lockable bending tool cover.** Prevents unauthorised changes to the limit switch (Section 4.8).

© Capital Machinery Sales Pty Ltd 2026

2 Specifications

The machine performs five basic functions: punching, flat bar shearing, notching, angle cutting and section cutting. All capacities are based on material of 45 kg/mm² tensile strength.

Item	Data
Product	Kingsland Multi 70 Iron Worker
Model	MULTI 70 (manufacturer model reference: 70XS Hydraulic Steelworker)
Motor	7.5 kW
Nett weight	1925 kg
Gross weight	2075 kg
Machine dimensions	172 x 73 x 173 cm
Packed dimensions	186 x 87 x 191 cm
Punch pressure	700 kN or 70 tons
Maximum system pressure (set at the factory)	245 bar (3500 psi)
Sound pressure level	73 dB maximum, measured at 1 m (manufacturer test, 09/06/1993)

Table 1: Machine data

Measurements

Item	Data
Length x width x height	1720 x 730 x 1730 mm (plus 90 mm lifting eye)
Die height from floor	1075 mm
Shear support from floor	890 mm
Angle support from floor	1155 mm
Section height from floor	1250 mm
Notch height from floor	890 mm

Table 2: Measurements

Capacities

All capacities are based on materials of 45 kg/mm² tensile strength.

Item	Data
Punching*	26 dia x 20 mm or 55 dia x 10 mm
Shearing	300 x 20 mm or 450 x 15 mm
Angle cutting	150 x 13 mm
Section cutting	45 mm round, 45 mm square
Notching	10 mm thickness
Punch pressure	700 kN or 70 tons
*Standard size fitment punch and die	22 mm

Table 3: Capacities

Capacities by station

All sizes are in mm unless stated.

Punching

Item	Data
Rated capacity	70 tons
Maximum capacities, diameter x thickness	26 x 20 and 55 x 10
Maximum stroke length	55

© Capital Machinery Sales Pty Ltd 2026

Item	Data
Speed, 20 mm travel	34 full cycles per minute
Throat depth, standard	305
Throat depth, XSD model	625
Largest hole	150
Working height	1025
Maximum section flange punch	305

Table 4: Punching capacities

Shearing

Item	Data
Flat bar	300 x 20
Alternative	450 x 15
Blade length	475
Angle flange trim	100 x 15
Working height	890

Table 5: Shearing capacities

Angle cutting

Item	Data
At 90° with non-deforming multi-edged blades	150 x 13
At 45° mitre	70 x 10
Working height	1155

Table 6: Angle cutting capacities

Section cutting

Item	Data
Round or square bar	45
Channel beam	130 x 45
Tee	90 x 12

Table 7: Section cutting capacities

Notching

Item	Data
Material thickness	12
Width	45
Depth, vee and rectangular	60 to 90
Angle flange	100 x 10
Working height	890

Table 8: Notching capacities

Additional tooling

Tooling	Item	Data
Bending	Maximum bar size	250 x 15 or 500 x 3
Punching at notch station	Maximum capacity	38 x 8
	Throat depth	125
Corner notch	Maximum	250 square x 6
Tube notch	Maximum diameter	83
Large hole punching	Hole sizes	Up to 57, 85 or 110 mm diameter

Table 9: Additional tooling

© Capital Machinery Sales Pty Ltd 2026

Standard equipment supplied with the machine

Item	Part number
Punch retaining ring	2557
Punch adaptor	9036
Punch and die (1 set x 32 mm)	9004-22 and 9023-22
Punch bolster	2837
Shear blade (1 set)	2389 and 2914
Angle blades (1 set)	2401 and 3931 (2)
Section blades (1 pair)	3197 and 3196
Notch punch and dies (1 set)	3408, 3429 (2) and 3536
Notch bolster	2203

Table 10: Standard equipment

Tool kit: C spanner 80 / 90; Allen keys 4, 5, 6, 8, 10, 12, 14, 17 and 19 mm; 9035 punch adaptor; 81029 die adaptor for 9020; 81031 punch adaptor for 9000; 2908 punch location key; 24 x 30 ring 601-853; 17 mm and 19 mm open-ended spanners; 12 mm star lock washer.

© Capital Machinery Sales Pty Ltd 2026

3 Installation

3.1 On delivery and lifting

On delivery, remove all anti-corrosion lacquer from the machined bright parts with petroleum solvent.

The machine has a lifting eye on top. Do all lifting and moving by this eye, with a suitably rated chain or sling. After the machine is in its final position you can remove the eye, but the hole must be blanked off.

WARNING: Do not use slings under the machine.

3.2 Site

- Place the machine on a solid foundation with enough room all round for easy working and maintenance.
- The machine can be used free standing, but bolting it to the foundation is recommended. Mounted directly on the floor, it gives a comfortable working height.
- Allow room for long lengths of material, and consider whether extra handling equipment is needed.

3.3 Electrical connection

- Electrical work must only be done by a licensed electrician.
- Bring the input wires to the electrics box in the base of the machine by a suitably protected underground supply. As an alternative, use an overhead supply to the top of the machine, routed inside the top guard and the hydraulic pipe trunking to the electrics box. An overhead cable helps avoid damage.
- Use a 30 amp isolating switch, fuse and suitable cable for the mains supply. The machine has a 7.5 kW motor, listed as 230 / 400 V.
- The circuit protects against sustained overload and phase failure. If the machine cuts out during a job or while running, find the cause so it does not happen again.

WARNING: Motor rotation must match the arrow on the motor fan end cover. The machine will not operate if the motor runs the wrong way. Do not let the motor run the wrong way for more than a few seconds, as this will seize the pump.

To check the direction, start and stop the motor with your foot on the footswitch. If the machine does not operate, a licensed electrician must reverse two of the three incoming phase connections.

3.4 Hydraulic pressure gauge

To check the working load, a pressure gauge can be fitted at the manifold. The maximum system pressure is set at the factory to 245 bar (3500 psi), which is below the maximum continuous working pressure of the pump. This gives increased reliability.

3.5 First checks

- Check the hydraulic fluid is at the top level of the inspection glass.
- Operate the oil pump. Check that oil pressure is indicated and check the pump oil level.
- Check punch and die alignment (Section 4.2).
- After an initial working in period of about 5 or 6 days, the machine may need settlement adjustment of the punch ram and shear arm (Section 5.5).

© Capital Machinery Sales Pty Ltd 2026

4 Operation

4.1 Controls

This manual does not include a photo of the control panel. The figure below shows the stations and main parts. The controls are described in the table.

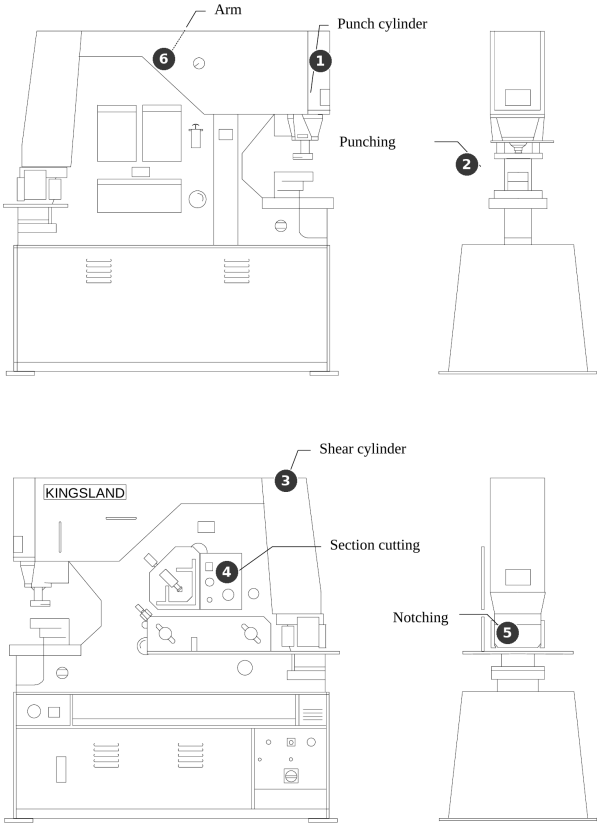

Figure 2: Stations and main parts, with item numbers 1 to 6 as in Quick Start

Control	Function
Operating mode switch (NORMAL and INCH)	INCH puts all work stations in slow speed inching mode for setting up. NORMAL gives working speed.
Footswitch (three positions)	Fully down: the tool moves down. Middle position: holds the tool. Foot removed: in NORMAL the tool returns to the top.
Stroke limit stops	Set the end of the punch and shear strokes (Section 4.9).
Material hold-downs and support screws	Set to the thickness of the material at the shear, angle and section stations.
Punch stripper plate	Holds the material down while the punch withdraws. Set with enough clearance to place and remove the material.
Pressure gauge (when fitted)	Shows the hydraulic system pressure at the manifold.
Lockable cover (bending tools)	Stops unauthorised changes to the limit switch. The setter keeps the key.

Table 11: Controls

4.2 Operating mode switch

The operating mode switch has two positions, **NORMAL** and **INCH**. With the switch set to INCH, all work stations run in slow speed inching mode.

Inching

In INCH, the punch (and the shear end) travels down slowly when the footswitch is fully pressed. The punch stays in any position when you take your foot off. Turn the switch to NORMAL to return the

© Capital Machinery Sales Pty Ltd 2026

punch to the top of the stroke. Do all tool setting and adjusting, and set the stroke limit switches, in INCH.

Normal operation

With the switch at NORMAL, the punch travels down at working speed when the footswitch is fully pressed. It returns to the top of the stroke when you take your foot off completely.

The footswitch has three positions. After you bring the punch down by pressing the footswitch fully, you can hold the punch at any point in the stroke by raising your foot to the middle position. Remove your foot to return the punch to the top.

Punch and die alignment

Check the alignment before use. You must check it after every punch and die change.

1. Switch to INCH, then inch the punch down by pressing the footswitch fully. Take care as the punch approaches the die. If it is misaligned, take your foot off the switch.
2. Release the bolster fixing screws. Operate the footswitch with care to align the bolster holding the die to the punch. The punch stays down.
3. Centralise the die clearance around the punch. Clamp the bolster in position and tighten the die retaining screw. Check the die stays central after clamping.
4. Return the punch to the top by switching back to NORMAL.

4.3 Punching

The large punch bed (illustration 1) has a removable front block (illustration 2). It suits a wide range of punching jobs. With the optional tooling, large holes of any shape, up to the diameter or square in the capacity chart, can be punched. In the overhang position, with the block removed, you can punch the flanges of channel or joist up to 38 mm diameter or diagonal at maximum capacity.

Extra tooling at this station can provide bar and plate bending (maximum length 500 mm), corner notching, tube notching and general die-set work.

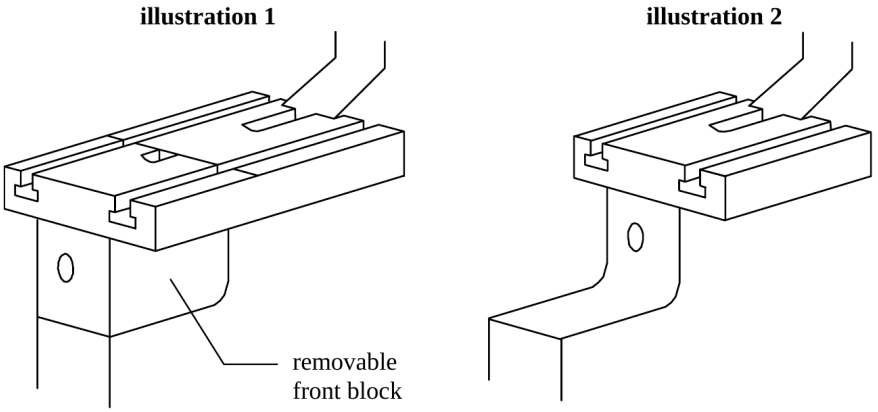

Figure 3: Punch bed with removable front block

WARNING: Punching with the bolster in the overhang position: the back securing bolt must be used.

The punch is held by locking ring part 2557. Depending on its size, the punch uses one of the two adaptors supplied. The die is held in the bolster by a set screw. Make sure the screw sits on the machined flat of the die when you align shaped punches and dies.

Adjust the punch stripper plate to give enough clearance to place and remove material. It must not restrict the punch stroke, so make sure the bottom stroke limit switch is set correctly. Punch holes with enough material around the hole so there is contact on both sides of the stripper plate. Stripping forces

© Capital Machinery Sales Pty Ltd 2026

can be severe, and unbalanced stripping forces from contact on one side of the stripper may break the punch. When you use stripper fingers for oversize holes or irregular shapes, position and adjust the fingers equally to avoid unbalanced stripping loads.

When ordering replacement punches and dies, always quote the model, type and serial number of the machine.

Tooling changes

The standard size fitment is 22 mm, unless ordered otherwise. Check punch and die alignment before punching any material.

- **Punch:** Unscrew the locking ring with the C spanner from the tool kit. Replace the punch and tighten the locking ring. Adaptors are supplied to suit different punch head sizes.
- **Die:** Slacken the set screw in the side of the bolster, remove the die, fit the new die and tighten the set screw.

After replacing punches and dies, align them correctly (Section 4.2). Take extra care when fitting square or shaped punches that they are aligned before you operate the machine.

General guides

1. Adjust the punch stripper plate with enough clearance to position and remove the material.
2. Punch holes with enough material around the hole so contact is made on both sides of the stripper plate. Unbalanced stripping forces may break the punch.
3. Oil the punch liberally. This lengthens the life of the punch and die and reduces stripping forces.
4. The quality of the hole or blank shows the condition of the punch and die.
5. Do not punch material thicker than the punch diameter. This overloads the punch and can break it.
6. Punch full and complete holes. Do not punch partial holes unless the tooling is designed to.
7. Place and remove small items with suitable handling aids. Extra guarding may be required to keep the operator safe.
8. Stay within the rated capacity of the machine.

Lubrication and die clearance

Apply one of the following oils by brush to the punch and die, or to both sides of the material being punched:

Make	Oil
Shell	Garia 927
BP	Servora 68
Castrol	Ilobroach 219
Duckhams	Adfornol EP7

Table 12: Punch and die oils

Aim for a die clearance of 10% of the material thickness. Whether the clearance is added to the die size or taken from the punch size depends on the work. When holes of a given size are needed, the punch is made to size and the die is made larger. When blanks of a given size are needed, the die is made to size and the punch is made smaller. Special clearance dies for thin sheet and plate, or size dies and special clearance punches, can be supplied to order.

Punching capacity

To stay within the rated capacity, use this guide to calculate punching pressure.

Punching pressure = shear area x tensile strength of material x 0.0098

Shear area = circumference of punch x thickness of material

Tensile strength = 45 kg/mm² for mild steel. The constant 0.0098 converts kg/mm² to kN.

© Capital Machinery Sales Pty Ltd 2026

Example: a 20 mm hole in 12 mm thick mild steel plate at 45 kg/mm² tensile strength. 20 x 3.142 x 12 x 45 x 0.0098 = 333 kN (33.3 tons).

Material thickness and maximum hole size

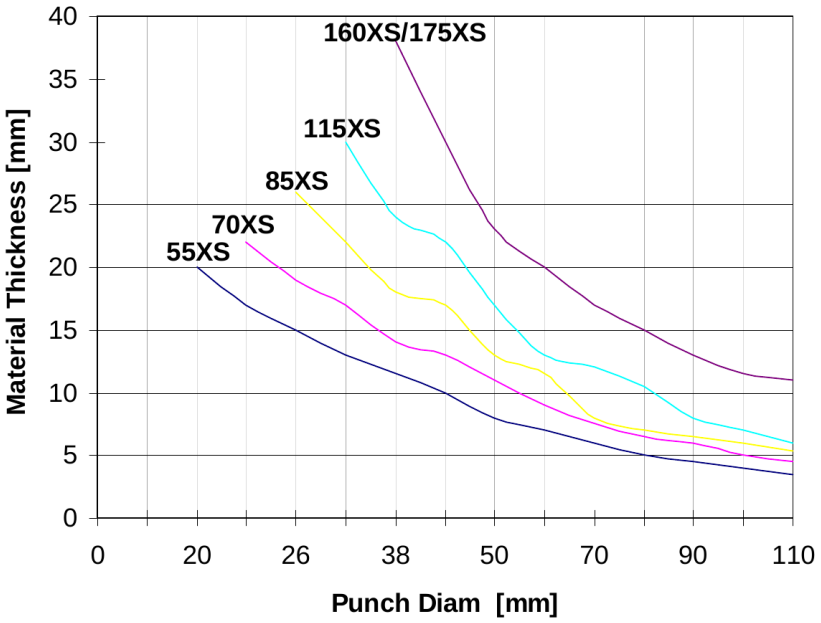

(all Capacities based on Material Strength of 45 kg/mm²)

Figure 4: Material thickness against punch diameter for each model (all capacities based on material strength of 45 kg/mm²). The 70XS line is the one for this machine.

DANGER: Do not attempt to punch material thicker than the punch diameter.

Standard punch tooling

The standard punch tooling includes the 22 mm punch and die. Other punches and dies are available on request.

© Capital Machinery Sales Pty Ltd 2026

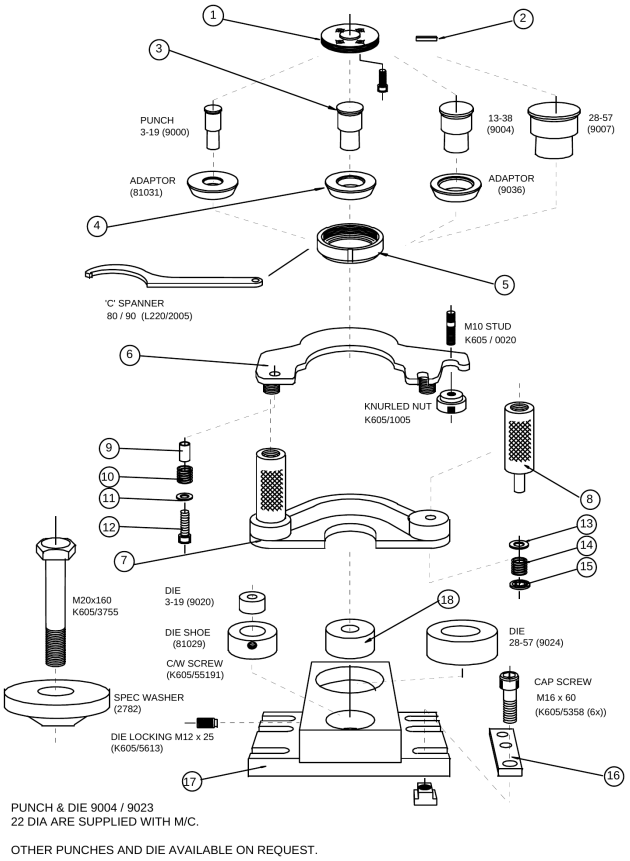

Figure 5: Standard punch tooling, items 1 to 18 (table below)

Item	Description	Qty
1	Pressure plate	1
2	Punch location key	1
3	Punch	1
4	Adaptor	1
5	Retaining ring	1
6	Stripper top plate	1
7	Stripper head	1
8	Stripper pillar	2
9	Spacer	1
10	Spring	1
11	Washer, 10 mm	1
12	Cap screw M10 x 35	1
13	Washer, 12 mm	2
14	Spring	2
15	Starlock washer, 12 mm	2
16	Bolster clamp	2
17	Bolster	1
18	Die	1

Table 13: Standard punch tooling

Large hole punching

Extra equipment is available for punching up to 110 mm diameter. The unit has a special ram pressure plate, adaptors, retaining ring, a bolster with die holder plates and a large hole stripper head. Punch and die sets are available for hole sizes up to 57 mm, 85 mm and 110 mm diameter (see Section 4.8).

© Capital Machinery Sales Pty Ltd 2026

Typical applications

The shapes below are achieved with special tooling at the punch station.

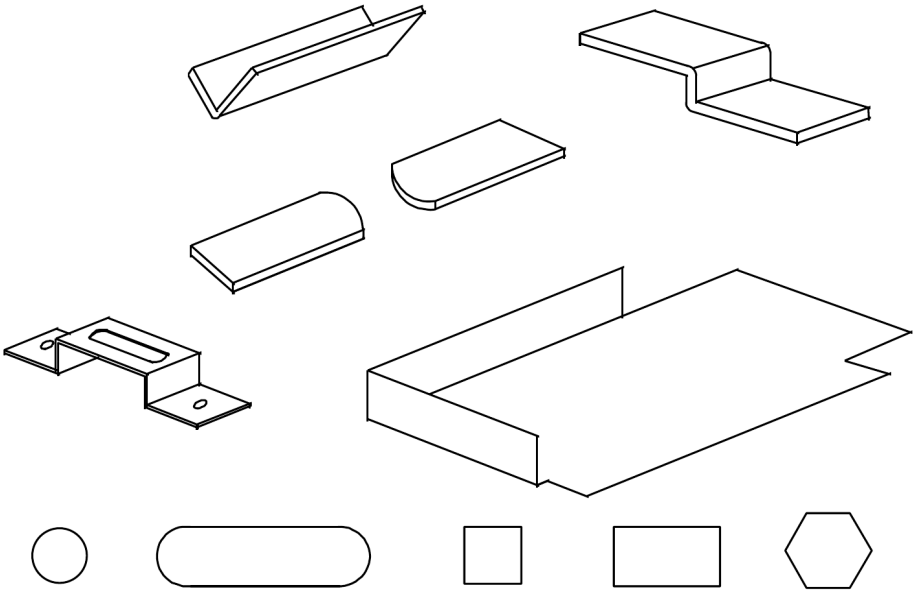

Figure 6: Typical work with special tooling at the punch station

Positioning the punch stripper

For changing the punch and die, the stripper can be opened away from its fixed position to give clear access. In the reversed position, the back stop can be set closer to the punch and die, and the stripper opens towards you.

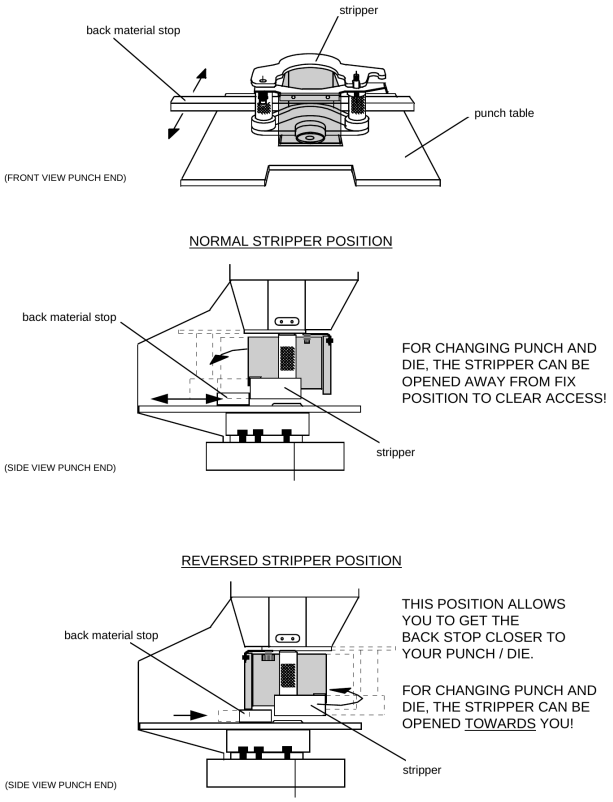

Figure 7: Stripper positions: front view, normal position and reversed position

Bar and sheet bending at the punch station

Press brake type tooling can be fitted at the punch station. It gives a press brake capacity of 250 x 15 mm up to a maximum width of 500 x 3 mm.

© Capital Machinery Sales Pty Ltd 2026

WARNING: Do not fit bending tools until adequate safety measures are in place. Bending tools can normally be used without extra fixed guarding if: the clearance between the top tool and the work piece is kept to a minimum and never exceeds 6 mm; the tool is set by a skilled and competent person; and a lockable cover is fitted to stop unauthorised changes to the limit switch, with the key kept by the setter. Bending tools are supplied with a suitable cover and lock as standard.

4.4 Shearing

The shear unit has a simple robust hold-down. It adjusts to any material thickness within the cutting capacity of the machine. A shear feed table with adjustable guides allows accurate feeding. Adjust the guide for mitre cuts up to 45 degrees in flat bar, or to trim the flanges of angle sections already cut at the angle cutting station.

The standard shear blades let you turn the bottom blade four times to give new cutting edges. The top blade must be ground to sharpen it. The blades give minimum distortion from full capacity down to material as light as 2 mm thick. Parallel top blades (part 2390) can be supplied to order for cutting narrow bar widths, or where flatness of cut is less important.

General guides

1. The quality of the cut shows the condition of the blades.
2. Set the hold-down for the thickness of the material being sheared. Do not let the ends of bars feed beyond the hold-down, because the bar tends to twist between the blades and cause body distortion.
3. Always feed material between the blades from the hold-down side.
4. Keep the blade area clean. Do not let mill scale build up.
5. Stay within the rated capacity of the machine.

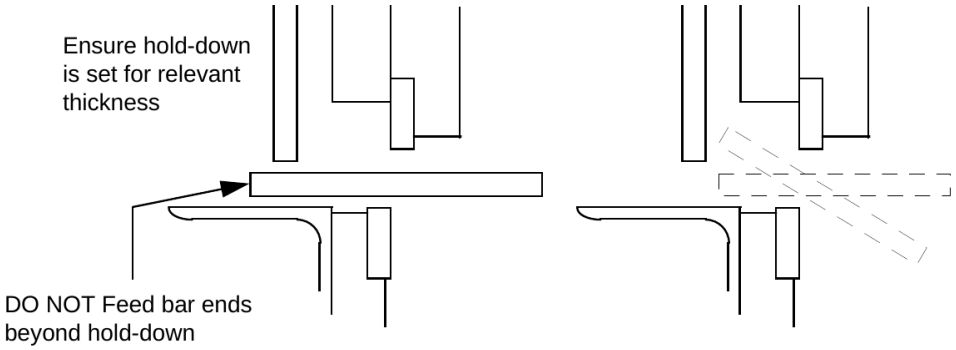

Figure 8: Shear hold-down: correct (left) and wrong (right)

4.5 Angle cutting

This station gives large capacity angle cutting at 90 degrees and lighter angle cutting at 45 degrees. To cut angle section, place the material through the hold-down into the cutting area. Adjust the support screw to the material, but leave enough clearance to feed the section on for progressive cutting. The slot in the shear hold-down lets angle sections sit for left hand or right hand trimming. Set the hold-down for the thickness of the material.

Mitre cutting at 45 degrees

First cut the angles to length, allowing about 12 mm oversize for end trimming.

1. Place the first end into the blade using the higher support position. Trim about 6 mm off the end of the section, keeping 45 degrees to the vertical position.

© Capital Machinery Sales Pty Ltd 2026

2. Place the other end into the blade using the left hand support position. Trim the section to length, keeping 45 degrees to the face of the machine.

To get other angles of cut between 45 and 90 degrees, first cut the angle section to length, then trim the flange to the angle you need in the shear station.

Hold-down adjustment for mitring on XS machines

The accessibility and distance between the hold-downs and blades have been amended to meet safety requirements. For mitring, adjust the hold-down as follows.

1. Remove the three securing screws and invert the hold-down.
2. Rotate the hold-down and secure it to the machine for mitring.

Once the hold-down is secured for mitring (position 3), you can also use it to cut angle at 90 degrees.

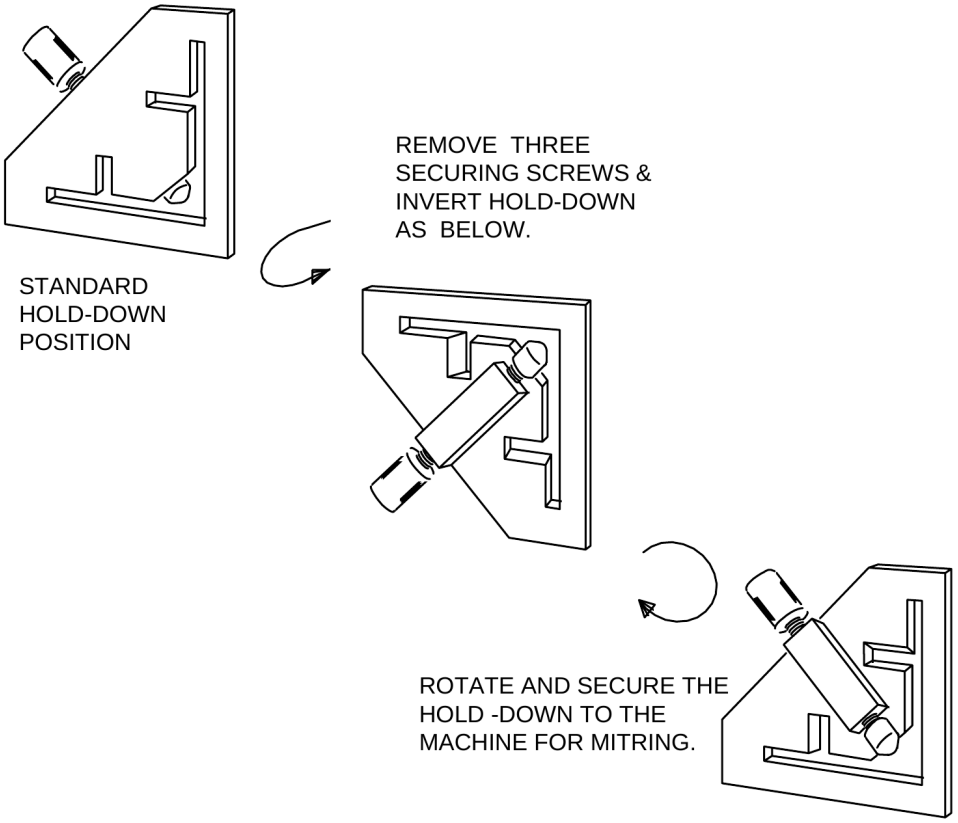

Figure 9: Hold-down positions: standard, inverted and secured for mitring

General guides

1. The quality of cut shows the condition of the blades. Keep the cutting edges sharp.
2. Set the support screw for the thickness of the material being cut.
3. Always feed material between the blades from the hold-down side.
4. Keep the cutting aperture clean. Remove small slivers, short cuts and any other pieces from the blade area. Do not let mill scale build up.
5. Stay within the rated capacity of the machine.

4.6 Section cutting

A variety of sections can be cut at this aperture, including round and square section, unequal angle, channel and joist. Blades for round and square section are fitted as standard and have apertures of different sizes. Choose the smallest aperture that accepts the material, so the cut is complete and well supported. The blades are held by simple clamps, so changes need no elaborate setting. Extra equipment lets the machine cut channel, joist and tee sections in this aperture.

© Capital Machinery Sales Pty Ltd 2026

To cut sections, place the material through the hold-down into the cutting area. Adjust the hold-down screw (if fitted) to get a square cut.

General guides

1. The quality of the cut shows the condition of the blades. Keep the cutting edges sharp.
2. Use bar in the smallest aperture that accepts it, so the cut is well supported.
3. Always feed material between the blades from the hold-down side.
4. Keep the cutting aperture clean. Remove small slivers, short ends and any other pieces from the blade area. Do not let mill scale build up.
5. Stay within the rated capacity of the machine.

4.7 Notching

The notching station has a rectangular punch as standard and a notch table with adjustable side and back stops, so material can be positioned repeatedly. Vee notch tooling can be fitted at this station, or you can fit units for narrow widths of rectangular or vee shapes. Units for bar end shaping are also available. Some punch end units can be fitted for small punching jobs up to 40 tons pressure (details on request).

General guides

1. The quality of the cut shows the condition of the tooling. Keep the cutting edges sharp.
2. Check that the notched blank ejects after notching, so slugs do not build up.
3. Stay within the rated capacity of the machine.

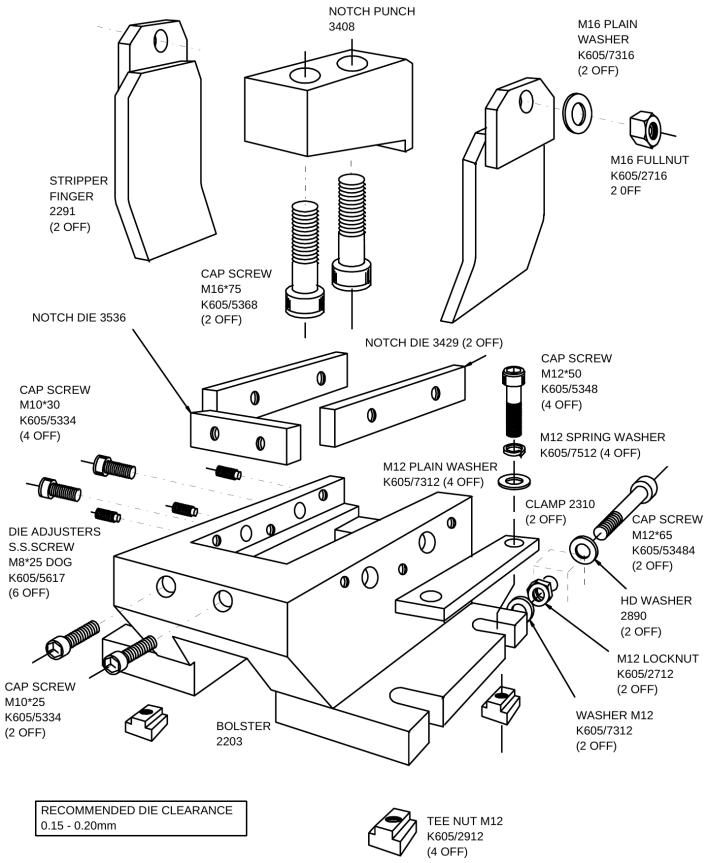

Figure 10: Rectangular notch tooling arrangement. Recommended die clearance 0.15 to 0.20 mm.

4.8 Special tooling

Always align and check the punch and die after fitting special tooling (Section 4.2). Review the guarding when any extra tooling is fitted (Section 1.2).

© Capital Machinery Sales Pty Ltd 2026

90 degree vee notch tooling

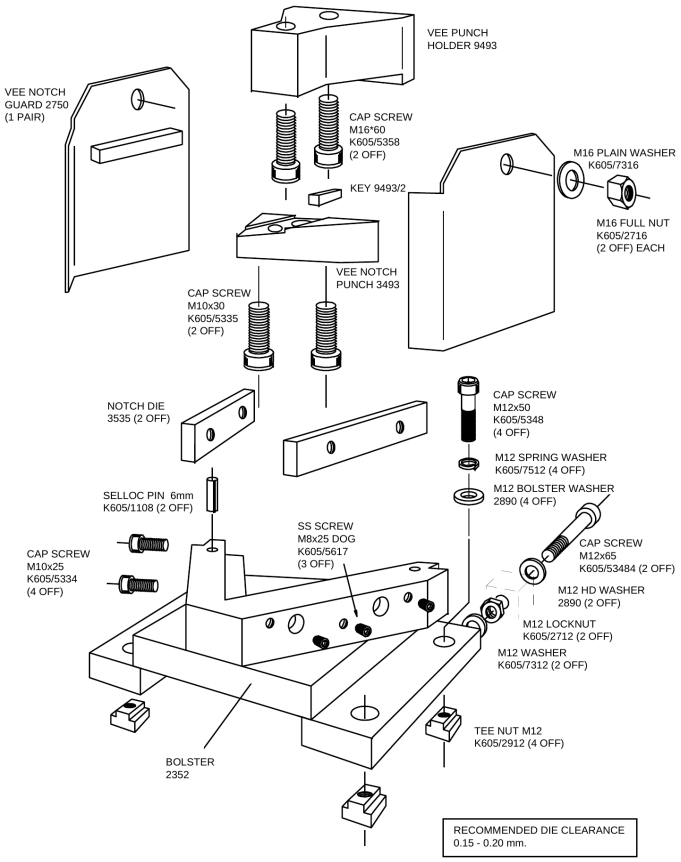

Figure 11: 90° vee notch tooling arrangement. Recommended die clearance 0.15 to 0.20 mm.

Web punching for I and U sections

When punching I section, remove the standard stripper head assembly and fit the special extended pillars 87140 with M20 locknuts. Minimum section is 60 mm for I or U section with the 9020 die (3 to 19 mm), and 120 mm with the 9023 die (5 to 38 mm), both used with punches 9006. Punches and dies are not included with the unit.

© Capital Machinery Sales Pty Ltd 2026

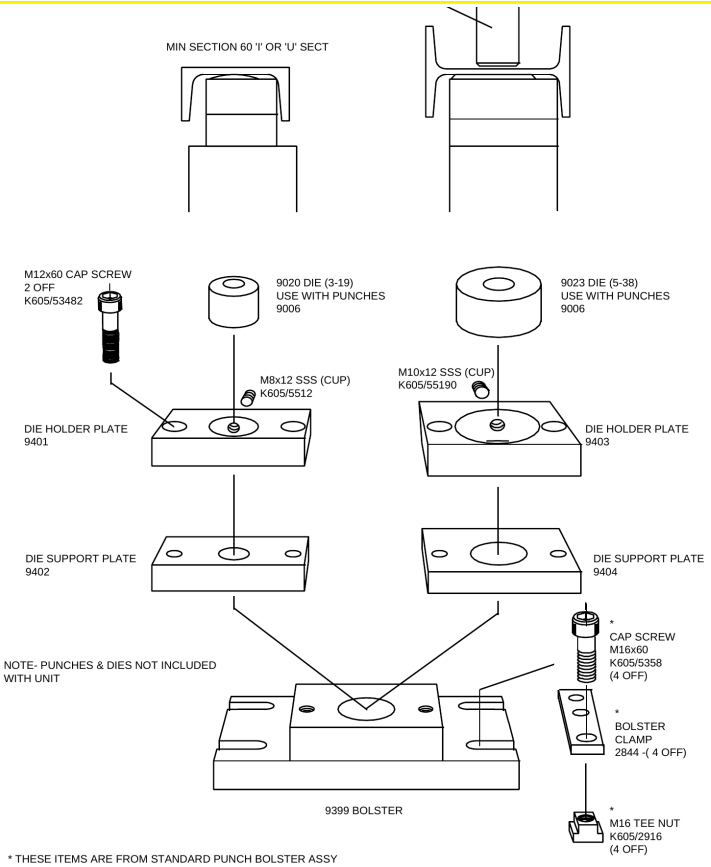

Figure 12: Web punching arrangement for I and U sections

Large hole punching

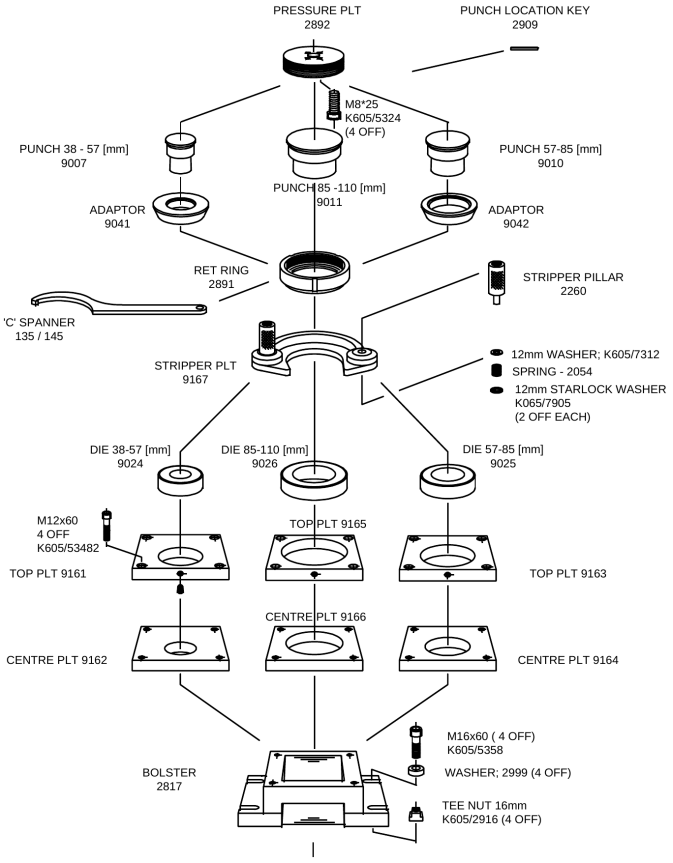

Figure 13: Large hole punching unit: punches 38 to 57 mm, 57 to 85 mm and 85 to 110 mm

© Capital Machinery Sales Pty Ltd 2026

Bar bending unit

When bending, always position the work piece centrally on the vee block to avoid side loading the ram. Air bending only. Adjust the down stroke limit switch to avoid unnecessary pressure on the machine. Capacity: 250 x 20 mm.

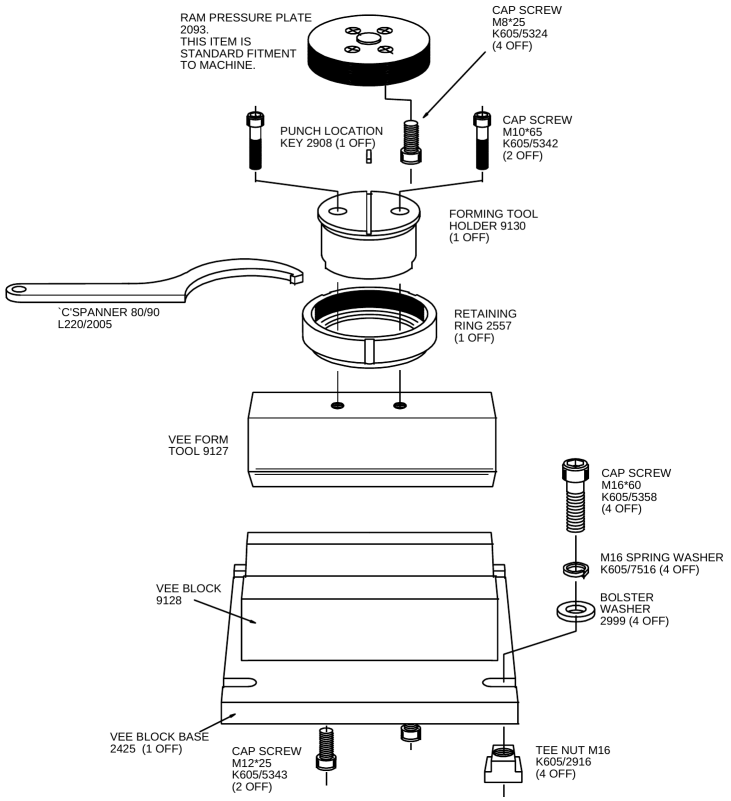

Figure 14: Bar bending unit

Sheet bending unit

When bending, always position the work piece centrally on the vee block to avoid side loading the ram. Air bending only. Adjust the down stroke limit switch to avoid unnecessary pressure on the machine. Capacity: 500 x 3 mm.

© Capital Machinery Sales Pty Ltd 2026

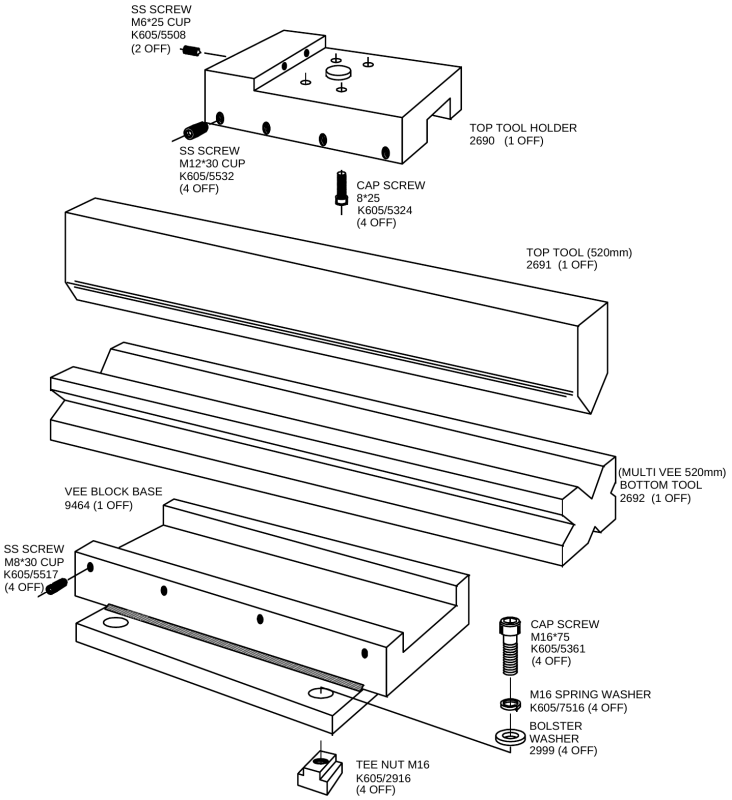

Figure 15: Sheet bending unit

Notch end punching

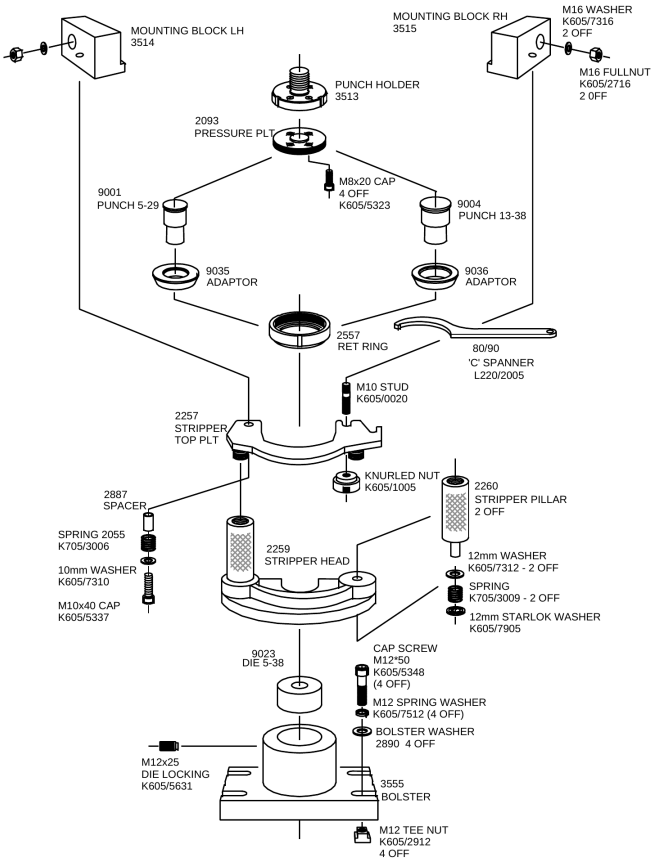

Figure 16: Notch end punching unit

© Capital Machinery Sales Pty Ltd 2026

4.9 Stroke adjustment

Punch end control

To reduce the down stroke (for example for repetitive bending), lower stop position A. To reduce the up stroke, operate the punch with the footswitch and hold it in the down position, then adjust stop position B. Release the footswitch to check the position and adjust again if needed.

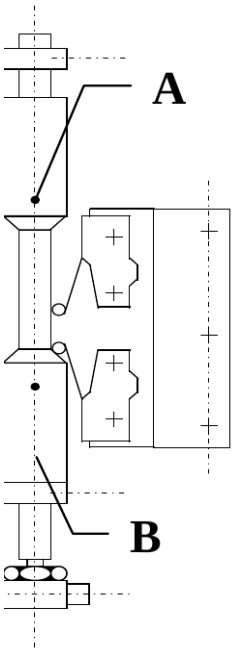

Figure 17: Punch end stroke stops A and B

Shear and notch end control

To reduce the return stroke, operate the shear with the footswitch and hold it in the closed position. Adjust the stop position. Release the footswitch to check the position and adjust again if needed.

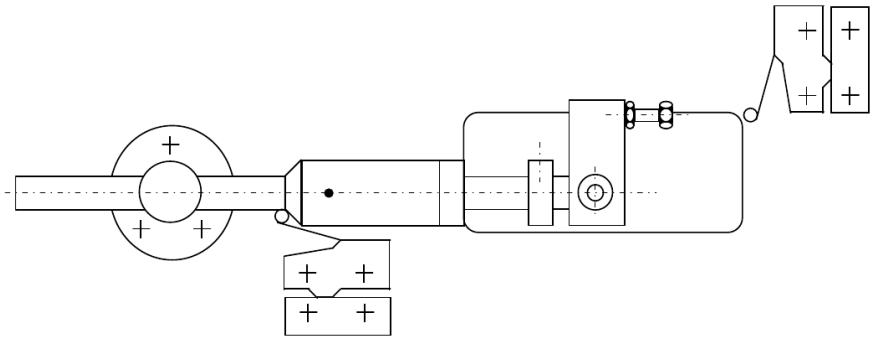

Figure 18: Shear and notch end stroke stop

NOTE: You can adjust the stroke limiters in INCH mode. Set the punch position or shear cutting position with the footswitch, adjust the stop position and tighten the stop screw. Then check the setting again under normal running.

4.10 Switching off

Switch the machine off whenever you leave it. Never leave the machine running unattended. Before you leave the work station, remove off-cuts, slugs and any other waste from around the machine.

© Capital Machinery Sales Pty Ltd 2026

5 Maintenance and Troubleshooting

WARNING: Before any maintenance, adjustment or tooling change: isolate the machine from the power supply and lock it out. Refit all guards and hold-downs, and check the safety devices, before the machine goes back into service. All maintenance must be done by suitably qualified people.

5.1 Maintenance schedule

When	Task
Daily, before starting	Check the fluid level in the tank and top up as needed.
	Check the oil level in the oil pump and top up as needed. Operate the pump 2 or 3 times a day.
	Check the condition of all blades, punches and dies.
	Check the work area is tidy. Remove off-cuts and slugs from the floor area.
	Clean off any mill scale around the cutting apertures.
Weekly (depending on workload)	Examine the power cable and footswitch cable for damage or chafing.
	Check the machine moves smoothly when running with no load.
Monthly	Check the arm adjustment for slackness (Section 5.5).
Every 12 months	Change the hydraulic fluid.
	Inspect the oil suction strainer. Wash it in paraffin if needed.
	With the lower cover removed, check the sludge tray under the main frame.
Occasionally	Apply a light grease to the flat on the punch ram.

Table 14: Maintenance schedule

CAUTION: Skipping oil checks, oil changes or lubrication can damage the machine. This damage is not covered by warranty (Section 6).

5.2 Hydraulic system and lubrication

A 7.5 kW motor drives a hydraulic pump. Through control valves, the pump feeds the power cylinders at each end of the machine. The punch cylinder loads the punching unit directly. The shear cylinder is connected to a pivoted arm.

- **Hydraulic fluid:** refer to the recommended oils label. The oil filler and breather is on the tank, reached by removing the louvred cover at the base of the machine.
- **Suction strainer:** inspect every twelve months. It is reached by releasing the screws in the tank cover. If needed, wash it in paraffin.
- **Sludge tray:** while the lower cover is off, check the tray under the main frame once every twelve months.

Hydraulic fluid

Fill to the top level of the inspection glass. Use only mineral oil as recommended, or an equivalent.

Make	Oil
Castrol	Hyspin AWS32-6018
BP	Energol HLP32
Shell	Pollus 37
Mobil	DTE 24
Esso	Nuto H32

© Capital Machinery Sales Pty Ltd 2026

Table 15: Hydraulic fluid

Oiling lubricant (shear end)

Check the oil level in the pump reservoir daily. Operate the pump 2 or 3 times daily. The oiling system applies to the shear end of the machine only. The punch end only needs an occasional application of light grease to the flat on the punch ram.

Make	Oil
Castrol	Magna DR 220
Shell	Tomma T220
BP	Energol GHL 220
Mobil	Vactra Oil No. 4
Esso	Febis K220

Table 16: Oiling lubricant

Before operating the machine, check that the hydraulic fluid is at the top level of the inspection glass, and that the oil pump has been operated, oil pressure is indicated and the pump oil level is correct.

5.3 Cleaning

Clean all visible working parts regularly to remove foreign matter. This prevents excessive wear and possible failure.

5.4 Blades and tooling

When ordering spare blades, punches or dies, always quote the model, type and serial number of the machine.

Shear blades

Turn the bottom blade four times to get new cutting edges. Grind the top blade to sharpen it. When the blades need sharpening, grind only the cutting faces, to a maximum regrind of 0.80 mm. After grinding, set the blades to a clearance of 0.10 mm. Adjusting screws are provided to reset the blades. They sit around the blade fixing screws and are reached when the shear table is removed. Keep an even clearance between the top and bottom blades along the whole blade length, and make sure the bottom blade is in a vertical plane, parallel to the top blade.

© Capital Machinery Sales Pty Ltd 2026

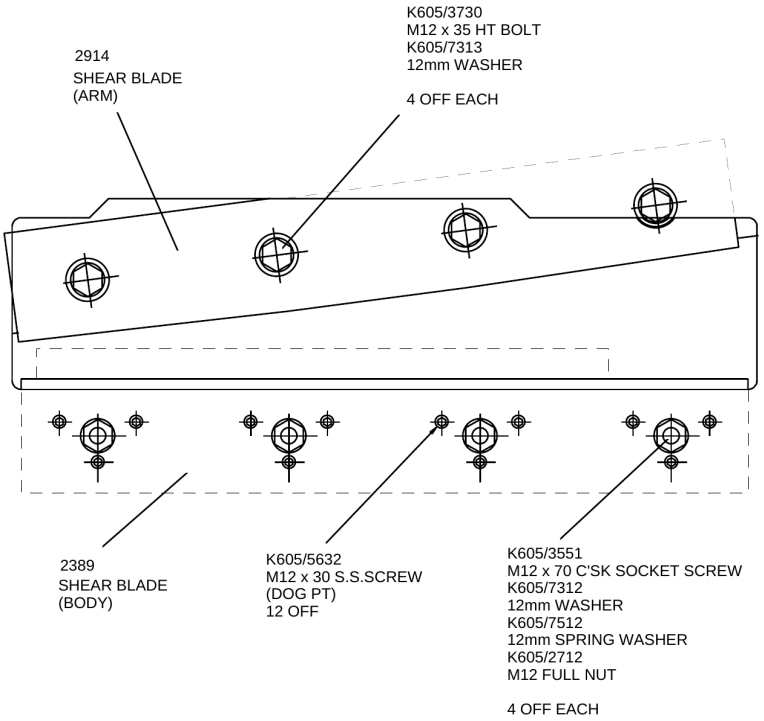

Figure 19: Shear blades and fixing materials

Angle blades

Each angle cutting blade has four cutting edges and is held by simple fixing screws. Do not resharpen these blades. After turning them four times, replace them with new blades. Blade clearance is 0.10 to 0.15 mm.

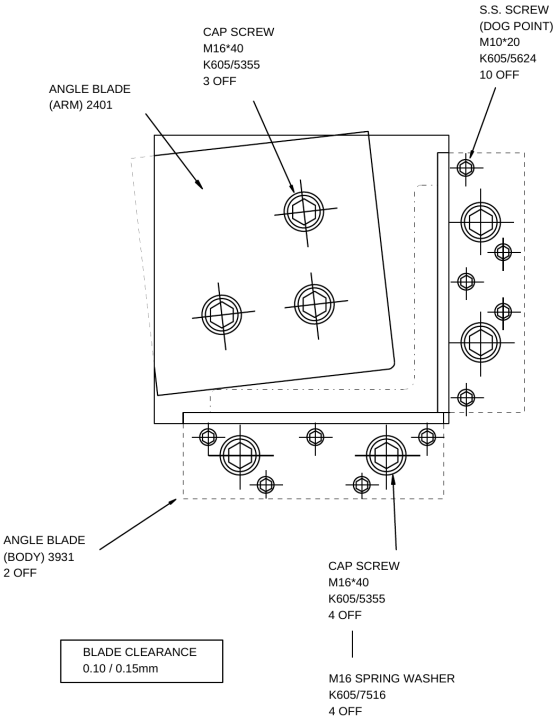

Figure 20: Angle blades and fixing materials

Section blades

To change the blades, remove the material support. Release the four screws holding the blade clamps, remove the clamps, then withdraw the blades. The arm blade is smaller than the body blade. This prevents incorrect assembly when insert carrier blades are used. There is also a safety peg, and a safety slot in the arm blade prevents incorrect positioning.

© Capital Machinery Sales Pty Ltd 2026

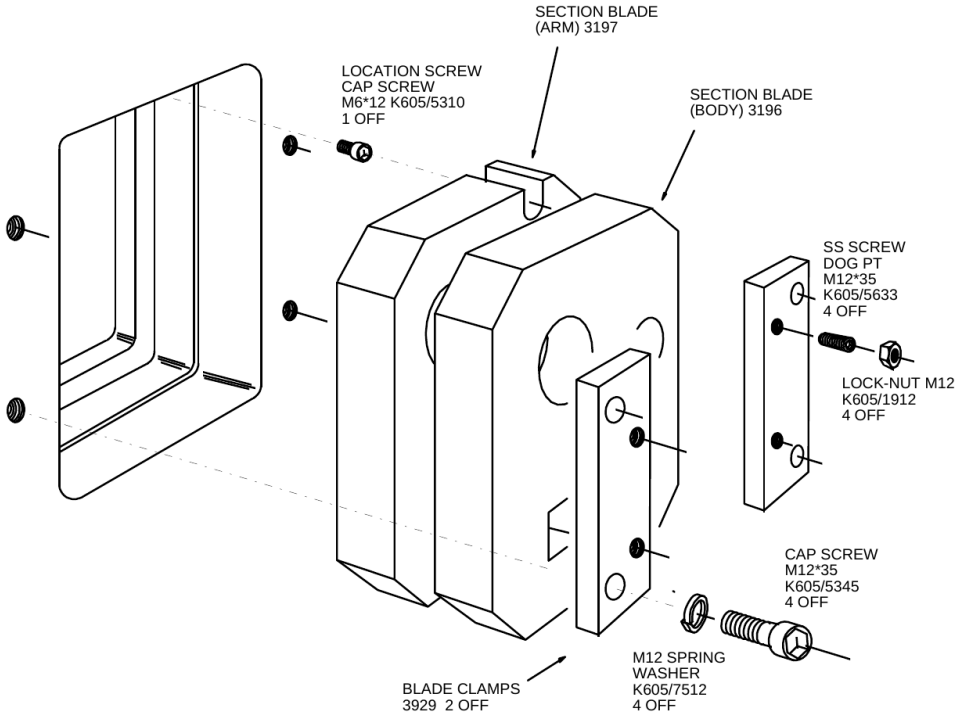

Figure 21: Section blades, clamps and fixing materials

To set blade clearance:

1. Make sure the arm blade is properly seated in the shear arm.
2. Position the body blade in the frame, firmly pushed against the arm blade.
3. Secure the blade clamp to the frame.
4. Tighten the four SS screws, then release each one by 0.2 of a turn.
5. Tighten the locknut while holding the SS screw with an Allen key.

Important:

- Never remove the screw fitted as a safety peg in the milled recess of the arm blade.
- Worn solid blades must be replaced with new blades. Do not regrind the faces, as this makes the blades undersize for a secure fit.
- For worn insert blades, new inserts can be supplied to grind to a worn sample.
- To fit new blades, reverse the removal procedure.
- The blade clamps are marked RH (right hand) and LH (left hand). Make sure they are refitted the correct way round.

Grinding channel insert blades

1. Fit the blade to the carrier and hold it with three screws. Make sure the blade seats on both faces.
2. Mount a sample of channel, with a cleanly cut end, on the blade. Line up the bottom flange with the bottom cutting face, and the inside of the web square with the inside web cutting face.
3. Scribe round the inside of the channel flanges. Remove the blade from the carrier.
4. With mark out A, continue the inner flange line. With mark out B, continue the line from the radius square to the cutting face. Allow a small clearance when grinding so the channel passes easily.
5. Grind the insert blades to the scribed lines. If you hand grind with the face of the wheel, make sure the angle between the face of the insert and the cutting face does not exceed 90 degrees.

© Capital Machinery Sales Pty Ltd 2026

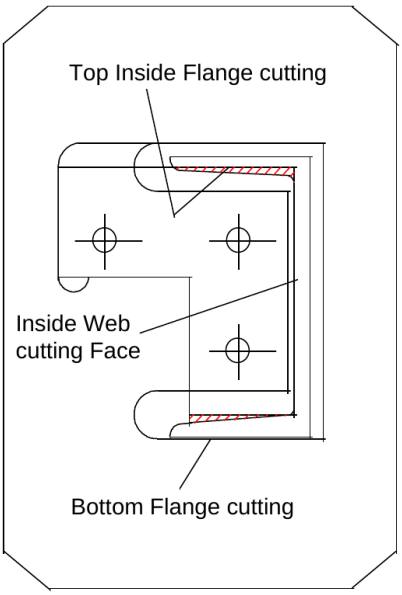

Figure 22: Channel blade: cutting faces

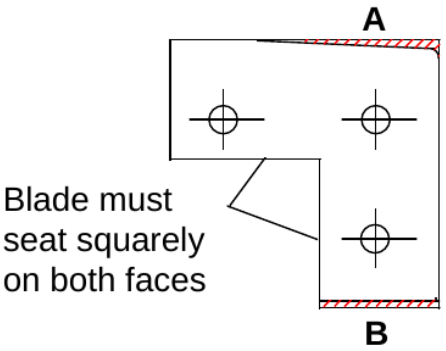

Figure 23: Channel blade: mark out A and B (blade must seat squarely on both faces)

Grinding joist insert blades

1. Fit the blades to the carrier and hold them with the fixing screws. Make sure they seat correctly.
2. Mount a sample of joist, with a cleanly cut end, on the blade. Line up the bottom flange with the bottom cutting face, and the web square with the web cutting face.
3. Scribe round the inside of the joist flanges. Remove the blades from the carrier.
4. With mark out A, continue the inner flange line if required. With mark out B, mark a radius to suit the sample joist.
5. The end face may need clearance so heavy or light sections pass easily when the blades are in the cutting position.
6. Grind the insert blades to the scribed lines. If you hand grind with the face of the wheel, make sure the angle between the face of the insert and the cutting face does not exceed 90 degrees.

CAUTION: Keep the blades cool when grinding, to keep the correct hardness.

© Capital Machinery Sales Pty Ltd 2026

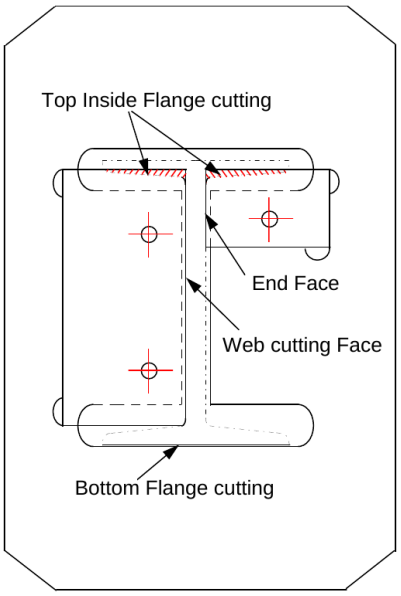

Figure 24: Joist blade: cutting faces

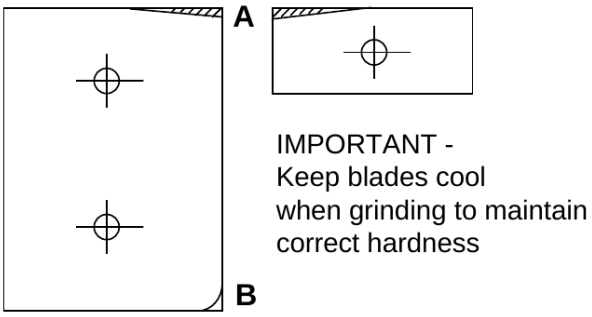

Figure 25: Joist blade: mark out A and B

Notch punch and dies

When the notch punch needs sharpening, grind only the side and front faces of the punch. The dies have four cutting edges. Turn them to present a new cutting edge. To adjust the dies after grinding the punch:

1. Slacken the bolster fixing screws and the position locking screws.
2. Move the bolster to the new side and front position on the punch. One side of the bolster is adjustable on the die.
3. Keep the clearances between the punch and die faces at 0.1 mm at the sides of the punch and 0.3 mm at the front of the punch. Adjust the bolster on the two faces, retighten the fixing screws and check the clearances.
4. Release the adjustable die blade fixing screws, adjust the blade to the punch, tighten the fixing screws and check the clearance.
5. Make sure the fixing screws are tight and the positioning locking screws are reset.

5.5 Punch ram and shear arm adjustment

After an initial working in period (about 5 or 6 days), the machine may need settlement adjustment.

Punch ram

The ram is guided by a ram guide pad. The pad may need adjusting. The adjusting screws are on the left-hand side of the punch end.

1. Remove the punch.

© Capital Machinery Sales Pty Ltd 2026

2. Adjust both screws equally and lock the nuts.
3. Test by working the ram (about 6 times). Do not over-adjust the screws.
4. Check pad side loading by operating in INCH mode. If the ram does not advance, the pad is over-adjusted.

Shear arm

Isolate the machine before making any adjustments. Adjust the pressure pads from the cutting side of the arm (the feed side of the machine). Adjust the arm before any adjustment of the shear blade.

1. Slacken the locking nuts (M24) at the three pad positions only.
2. Turn the adjusting screws clockwise until you feel slight resistance.
3. Tighten the lock nuts and test the movement of the arm.

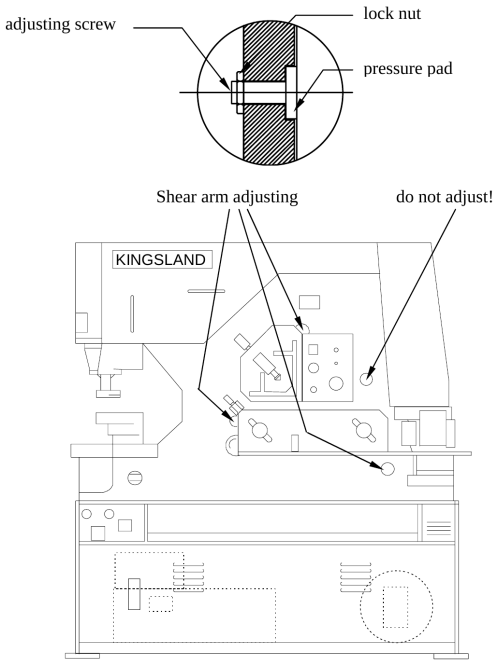

Figure 26: Shear arm adjusting. Adjust the three pad positions only. Do not adjust the position marked "do not adjust".

© Capital Machinery Sales Pty Ltd 2026

5.6 Hydraulic and electrical circuits

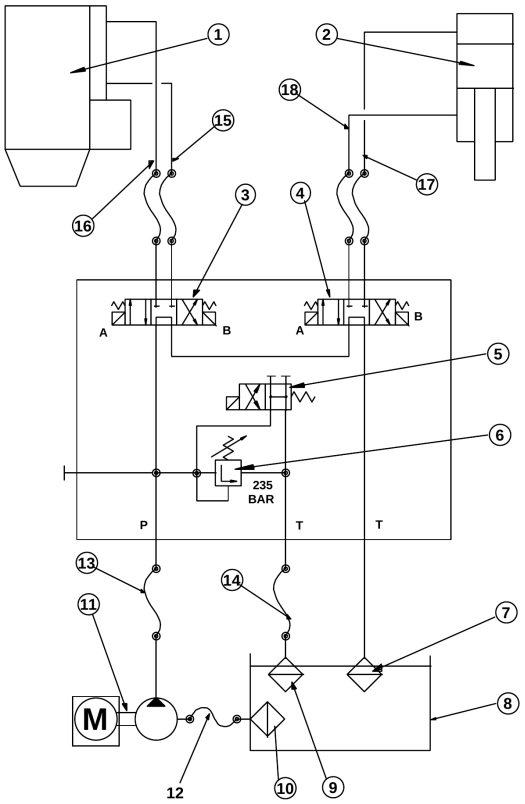

Figure 27: Hydraulic circuit, items 1 to 18 (table below)

Item	Description	Qty
1	Punch cylinder	1
2	Shear cylinder	1
3	Punch control valve	1
4	Shear control valve	1
5	By-pass control valve	1
6	Relief valve	1
7	Diffuser	1
8	Tank	1
9	Diffuser	1
10	Suction strainer	1
11	Pump	1
12	Flex pipe (tank to pump)	1
13	Flex pipe (pump to valves)	1
14	Flex pipe (relief return)	1
15	Flex pipe (B, punch cylinder)	1
16	Flex pipe (A, punch cylinder)	1
17	Flex pipe (B, shear cylinder)	1
18	Flex pipe (A, shear cylinder)	1

Table 17: Hydraulic circuit parts

The electrical circuit is shown below. Only a licensed electrician may work on it. The switch marked with an asterisk is not fitted to 160XS or 175XS machines.

© Capital Machinery Sales Pty Ltd 2026

10.2 ELECTRICAL CIRCUIT

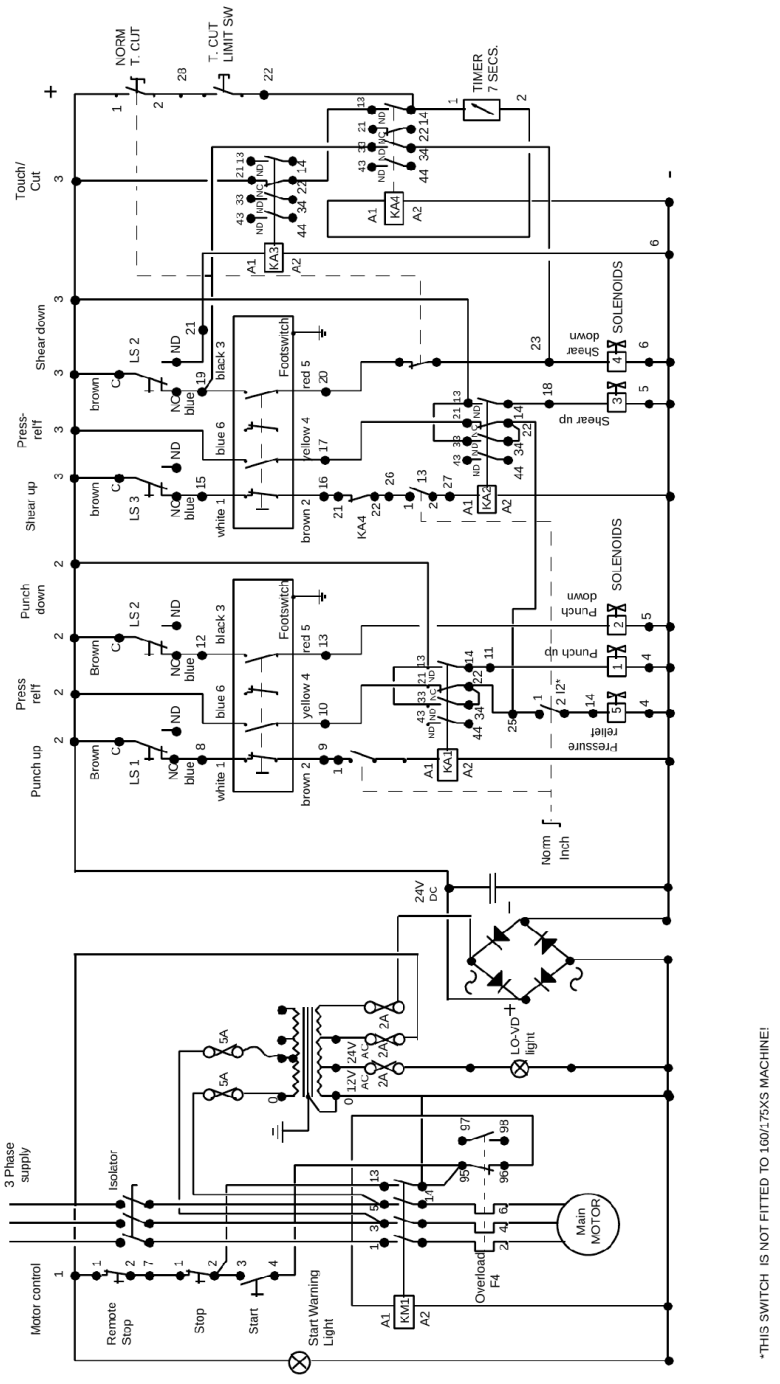

Figure 28: Electrical circuit

5.7 Troubleshooting

Problem	Cause	Fix
Machine cuts out during a job or while running	The overload or phase failure protection has operated.	Find the cause before you use the machine again (Section 3.3).
Machine does not operate	The motor is running the wrong way.	Stop at once. A licensed electrician must reverse two of the three incoming phase connections (Section 3.3).
Ram does not advance in INCH mode	The ram guide pad is over-adjusted.	Adjust both screws equally and lock the nuts (Section 5.5).

© Capital Machinery Sales Pty Ltd 2026

Problem	Cause	Fix
Poor quality hole or blank	Worn or misaligned punch and die, or not enough oil.	Check alignment (Section 4.2), oil the punch and die, and replace worn tooling.
Poor quality cut	Worn blades or incorrect blade clearance.	Turn, replace or regrind blades as in Section 5.4. Check the clearance.
Punch breaks	Material thicker than the punch diameter, unbalanced stripping forces, or capacity exceeded.	Adjust the stripper plate (Section 4.3). Stay within the rated capacity.
Bar twists between the shear blades	Bar end fed beyond the hold-down.	Set the hold-down for the thickness. Do not feed bar ends beyond it.
Any problem that continues		Contact Capital Machinery Sales through capitalmachinery.com.au.

Table 18: Troubleshooting

5.8 Parts

To order parts, contact Capital Machinery Sales with the machine model, serial number and part description. A photo of the part helps. Common wear parts include punches, dies, shear blades, angle blades, section blades, notch punch and dies, and the oil suction strainer.

© Capital Machinery Sales Pty Ltd 2026

6 Warranty and Support

6.1 Warranty

- Standard 12 month warranty, unless a different period is shown on the product page or your invoice.
- Covers replacement of any part or material found to be defective under normal working conditions. Misuse and damage are not covered.
- This warranty is in addition to your rights under the Australian Consumer Law. Full terms are at capitalmachinery.com.au.

Not covered by warranty

- Using non-genuine parts, or parts not supplied or approved by Capital Machinery Sales, including consumables such as punches, dies, blades and filters. Any damage this causes is not covered.
- Tampering with, opening or modifying the machine or its sealed components.
- Incorrect power connection.
- An unsuitable operating environment, poor maintenance, work by unauthorised people, excessive use, or not following this manual.

6.2 Making a warranty claim

Lodge your claim online at capitalmachinery.com.au/warranty-claim. Have your invoice number and date of purchase ready, and describe the problem. Photos or a short video help us resolve it faster. Our team will reply by email with the next steps.

6.3 Service and parts

For service, spare parts and support, visit capitalmachinery.com.au.

6.4 Revision history

Revision	Date	Change
Rev 0	25/11/2026	First issue

Table 19: Revision history

© Capital Machinery Sales Pty Ltd 2026

Capital Machinery Sales has supplied, serviced and supported workshop machinery across Australia for over 20 years, backed by more than 30 years of hands-on industry experience.

Sales, service and spare parts

capitalmachinery.com.au

Warranty claims: capitalmachinery.com.au/warranty-claim

Hallam, Victoria